WITH SOLAR POWER TO THE HIGHEST VOLCANO IN THE WORLD

WE NEVER PLANNED TO BUILD A SOLAR ELECTRIC VEHICLE BUT…

- 350km away from the power grid
- 6 Weeks without contact to civilisation

1000 V
DC-AC losses
Fronius
FRONIUS PRIMO
AC-DC losses

DESIGN PRINCIPLES

- **Redundancy**
- **Modularity**
- **Safety**
- **KEEP IT SIMPLE AND STUPID**

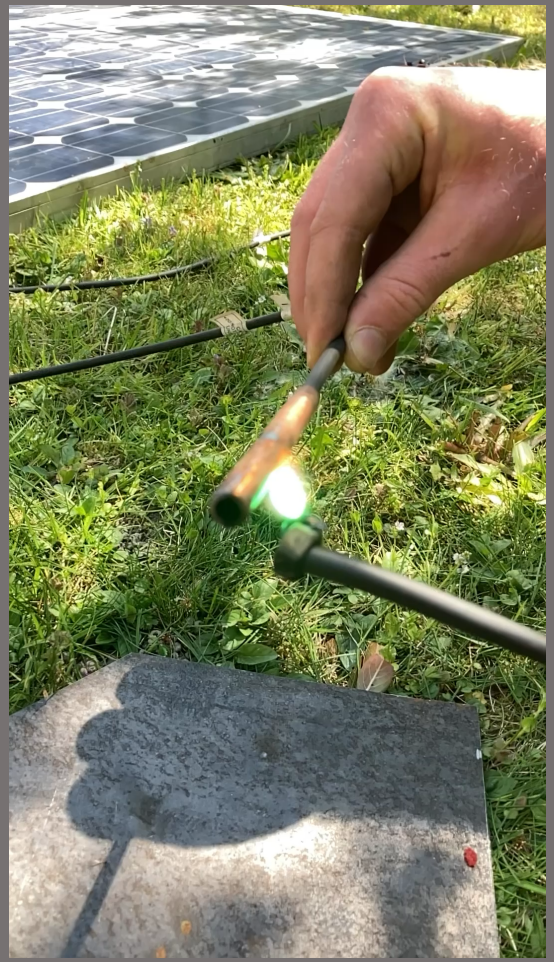

BRUSA
BRUSA
BRUSA
RCC-02
OCOOL

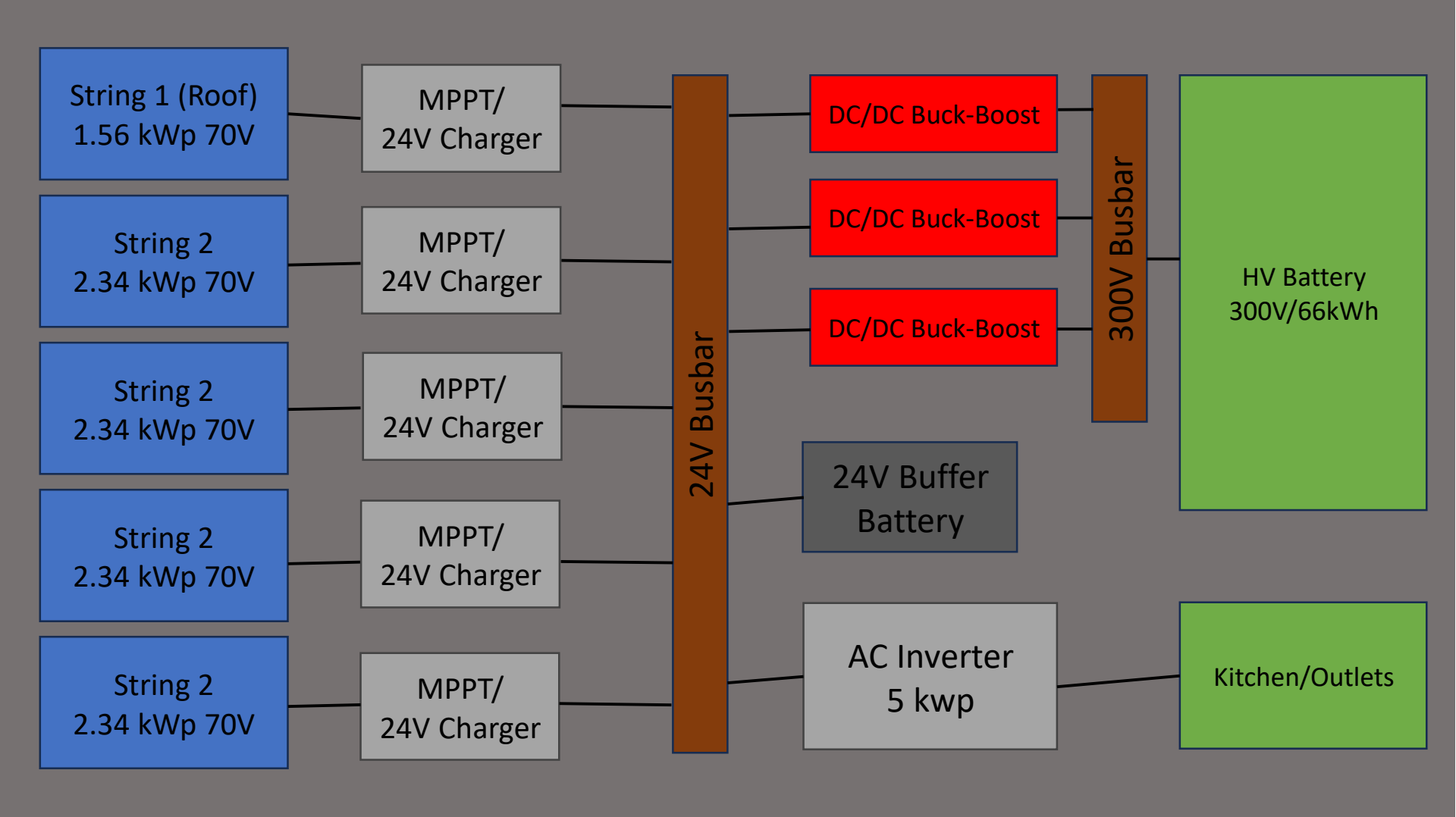
String 1 (Roof)
1.56 kWp 70V
String 2
2.34 kWp 70V
String 2
2.34 kWp 70V
String 2
2.34 kWp 70V
String 2
2.34 kWp 70V
MPPT/
24V Charger
MPPT/
24V Charger
MPPT/
24V Charger
MPPT/
24V Charger
MPPT/
24V Charger
24V Busbar
DC/DC Buck-Boost
DC/DC Buck-Boost
DC/DC Buck-Boost
300V Busbar
HV Battery
300V/66kWh
24V Buffer
Battery
AC Inverter
5 kwp
Kitchen/Outlets

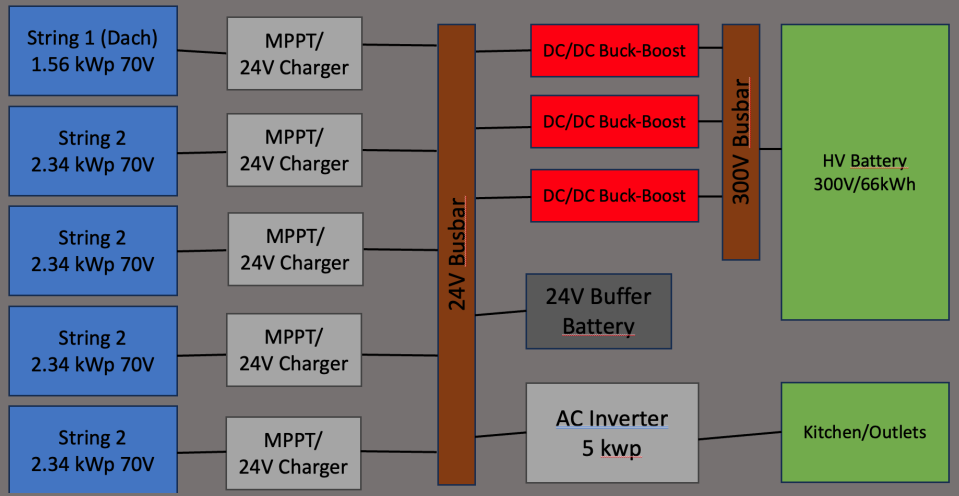
String 1 (Dach)
1.56 kWp 70V
String 2
2.34 kWp 70V
String 2
2.34 kWp 70V
String 2
2.34 kWp 70V
String 2
2.34 kWp 70V
MPPT/
24V Charger
MPPT/
24V Charger
MPPT/
24V Charger
MPPT/
24V Charger
MPPT/
24V Charger
24V Busbar
DC/DC Buck-Boost
DC/DC Buck-Boost
DC/DC Buck-Boost
300V Busbar
24V Buffer
Battery
AC Inverter
5 kwp
HV Battery
300V/66kWh
Kitchen/Outlets

BRUSA
BRUSA
BRUSA
RCC-02

PEAK EVO
HIGH ALLTITUDE
POWERED BY SOLA
FORTIS
MAMMUT

MAMMUT
VENT BLOCKER
DON JUAN
Barista

Gebrüder Weiss
Transport and Logistics
PEAK EVOLUTION
FORTIS
nokian TYRES
VDS
SCHAEFFLER
SpaceDrive
TAG HEUER
Ansys
Mobil 1

Gebrüder Weiss
BOSCH

BOSCH

NEW ALTITUDE WORLD RECORD FOR ELECTRIC VEHICLES:
6510 METERS

PEAK EVOLUTION
BOSCH

PEAK EVOLUTION

WWW.PEAKEVOLUTION.CH

TERREN

WWW.TERREN.CH